Do you know what happens to your water between the distribution center and your home?

Problem

- Water is treated centrally
- But travels through **aging pipelines before reaching homes**
- Quality can degrade during this last-mile delivery
- The utility is responsible for the water until it reaches your **property line**.
- You are 100% responsible for private wells
- Consumers lack **real-time visibility**

Water may be safe at the plant but, is it safe at the tap?

Scale of the Problem

- 257+ million Americans rely on public drinking water systems
- ~240,000 water main breaks occur annually
- Many pipes are **40–100+ years old**
- 6–10 million homes still connected via **lead service lines**
- 30–40 million Americans rely on **unmonitored private wells**

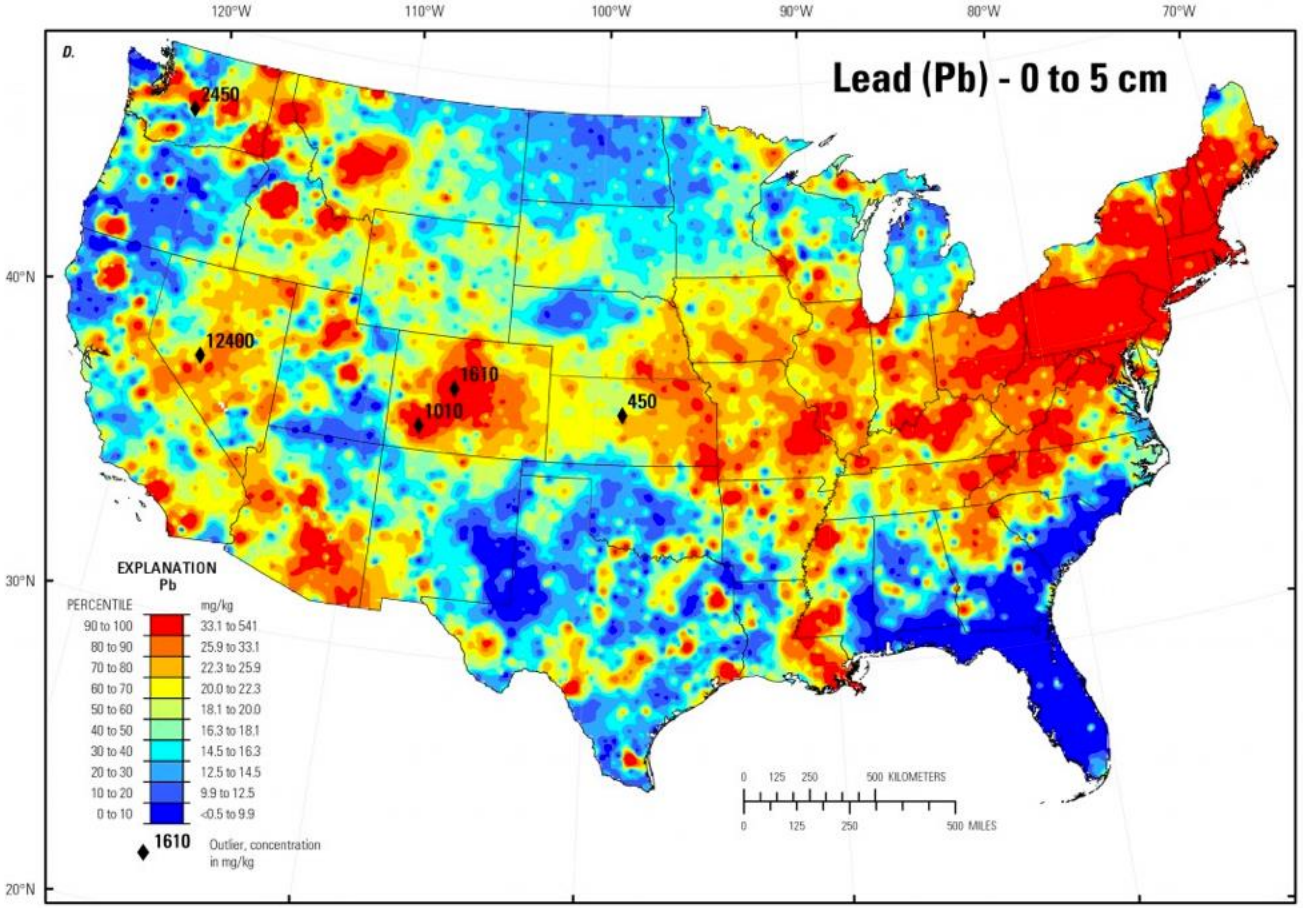

https://aanmc.org/naturopathic-news/flint-water-crisis-environmental-medicine-perspective/

When Distribution Systems Fail - Flint Water Crisis

What happened

- City switched water source to reduce costs
- Lack of corrosion control caused **lead leaching from aging pipes**

Scale

- ~100,000 residents exposed
- 9,000 children at risk of lead exposure
- Legionnaires' disease outbreak → **12 deaths**

Consequences

- Neurological damage risks in children
- Long-term loss of public trust
- **Hundreds of millions of dollars** in infrastructure repairs

The Hidden Danger in Troy's Water

- A family in Troy, NY wakes up. They brush their teeth, make coffee, give their toddler a sippy cup of water.

- They don't know the water contains lead levels 10 times higher than EPA safety limits.

Troy's Lead Crisis by the Numbers

171

ppb lead detected

(EPA limit: 15 ppb)

4,500

lead service lines needing replacement

Why Today's Monitoring is Not Enough

- Utilities test water at treatment plants
- Limited sampling points in distribution network (Samples 60 homes every 6 months)
- No continuous monitoring at household entry
- Problems often identified after citizens complaint

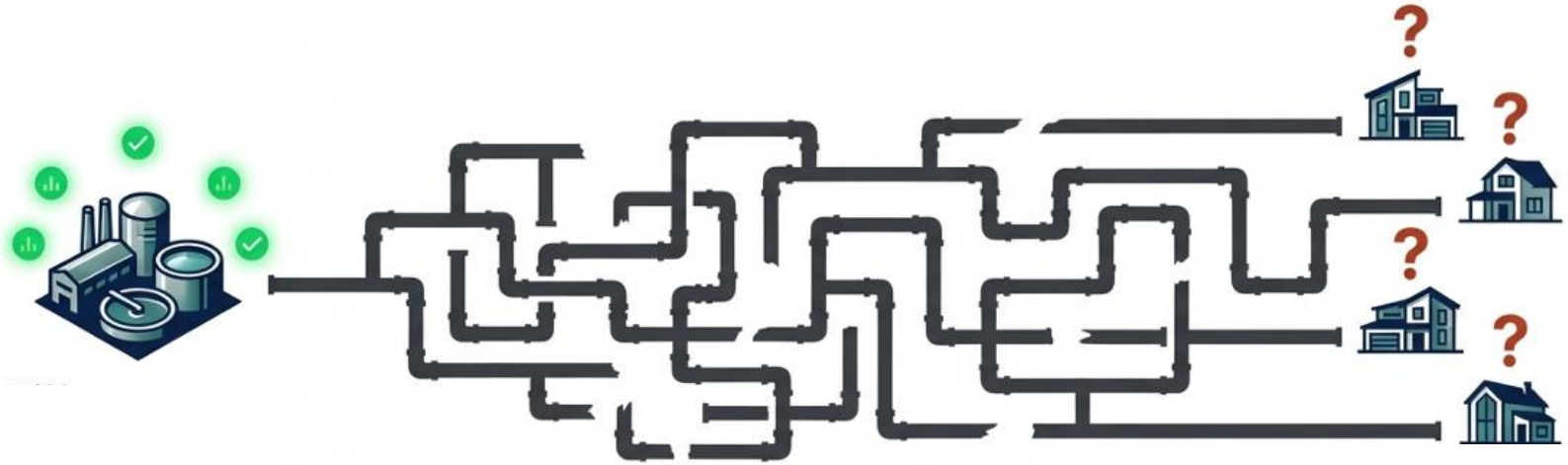

Delayed contamination detection and slow response.

Problems with current solutions

City of Troy

- Replacing 4,500 lines will take years
- Utility Testing is slow

Private Market

- No water usage
- No leakage
- No plumbing health

Why Current Monitoring isn't Enough

There are a very limited number of functions provided by companies:

Water usage

Leaks

Plumbing health

There are no companies in the market that provide continous monitoring of water quality

AquaSure: Real-Time Water Quality Intelligence
Transforming household water meters into drinking water safety guardians

- Upgrade existing water meters with **integrated quality sensors**
- Continuous monitoring at **point of entry to homes**
- Real-time data transmission to utility cloud platform
- Early contamination detection and alerts
- Every household meter becomes a **water safety node.**

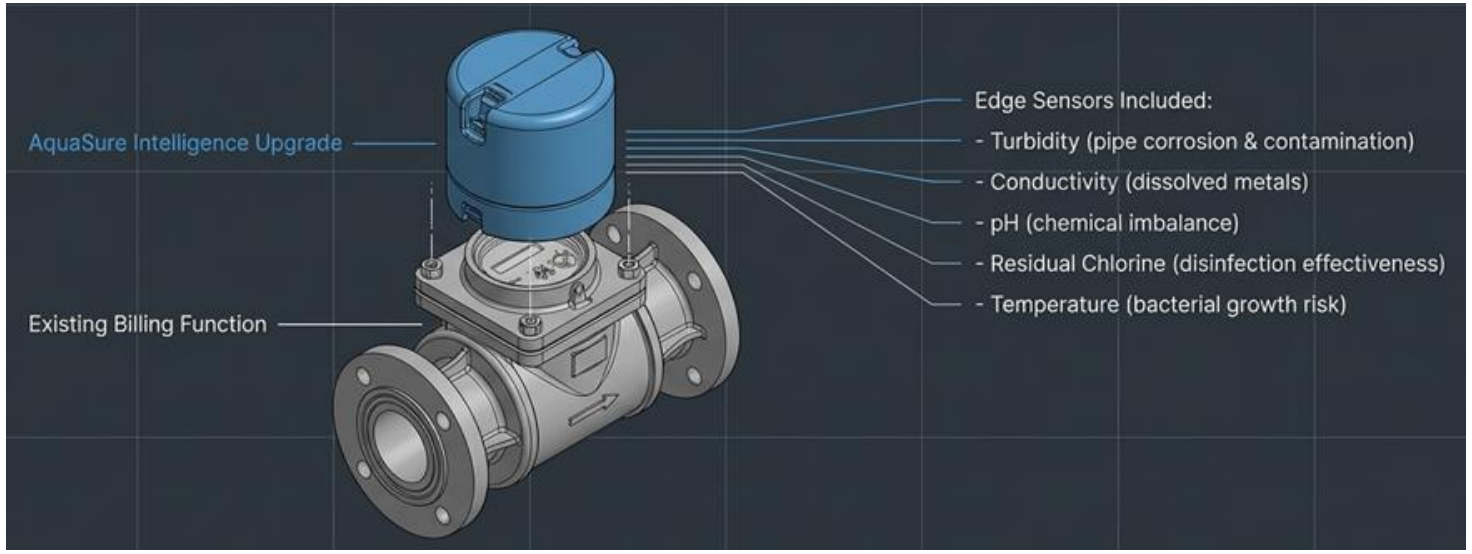

AquaSure: How it Works

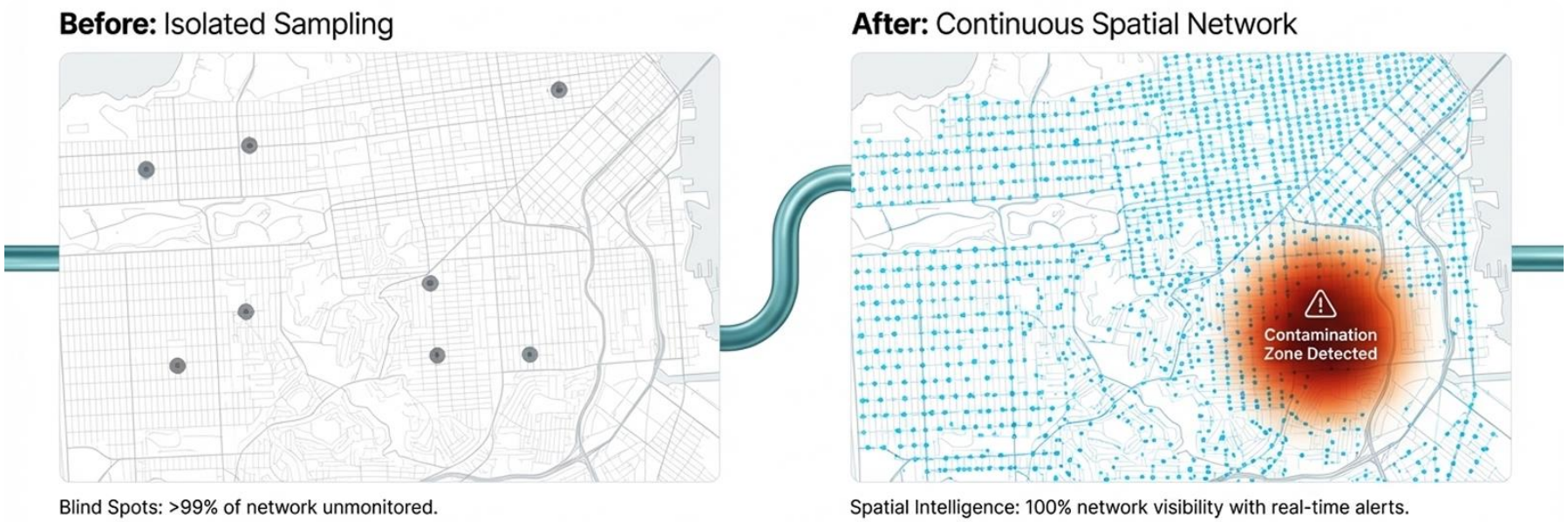

AquaSure : Innovation

- Integrates **billing + quality sensing in one device**
- Creates distributed **last-mile water intelligence network**
- Enables **high-resolution contamination mapping**
- Real-time transparency for utilities and residents
- Supports predictive infrastructure maintenance

Deployment

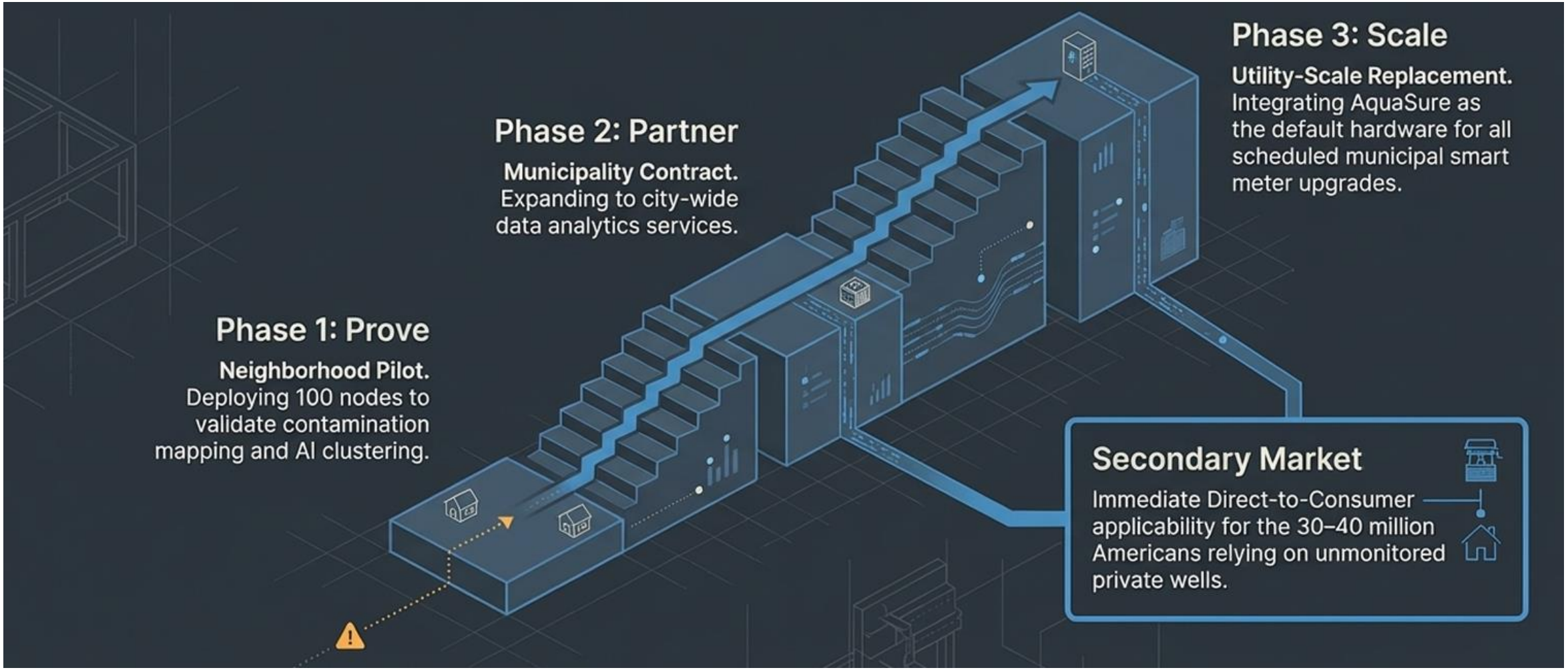
Phase 1: Prove
Neighborhood Pilot.
Deploying 100 nodes to validate contamination mapping and AI clustering.
Phase 2: Partner
Municipality Contract.
Expanding to city-wide data analytics services.
Phase 3: Scale
Utility-Scale Replacement.
Integrating AquaSure as the default hardware for all scheduled municipal smart meter upgrades.
Secondary Market
Immediate Direct-to-Consumer applicability for the 30–40 million Americans relying on unmonitored private wells.

Clean water is treated centrally, but safety must be verified locally.

We are turning every existing water meter into a guardian of public health.

Macro/Utility

Micro/Resident

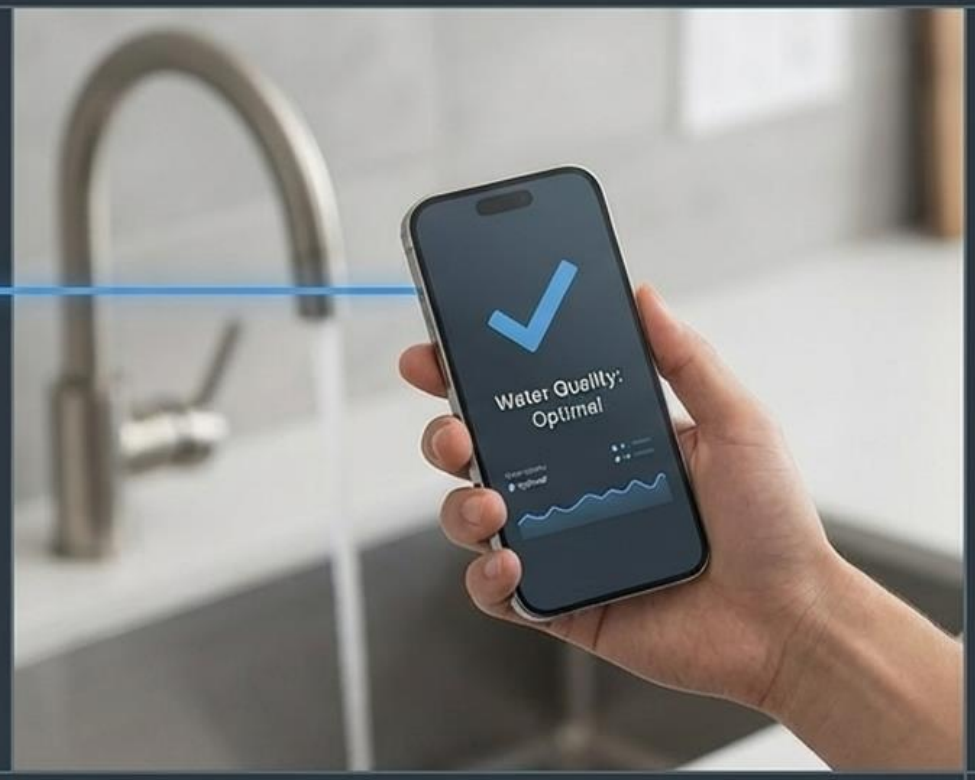

Thank you!